CADDY

INOVARA GROUP

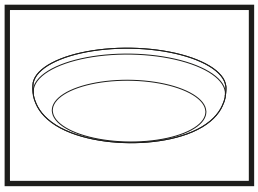

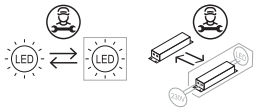

IP65 | IK10 | CE | UKCA | 3000K 4000K 6500K | 9W 12W 16W

220-240V 50/60Hz | INRUSH 15A/0.25ms | A↑G C

1

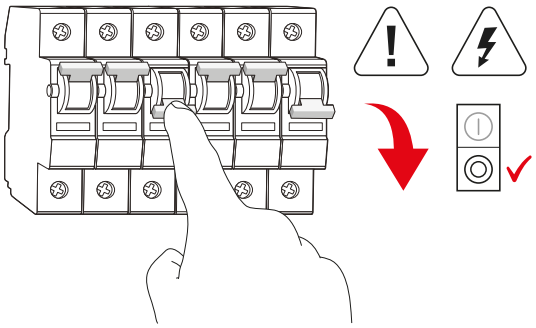

2

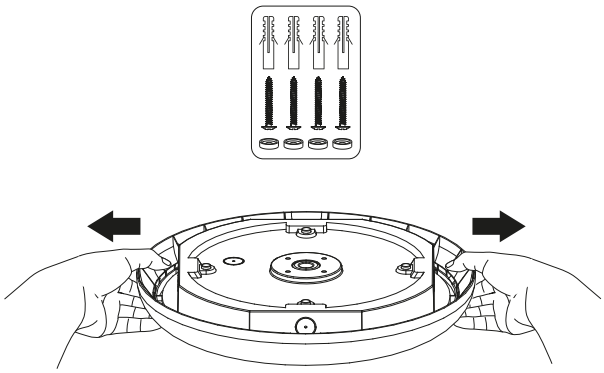

3

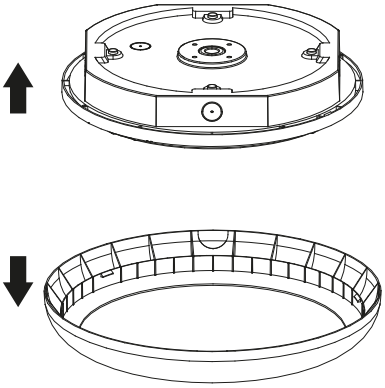

4

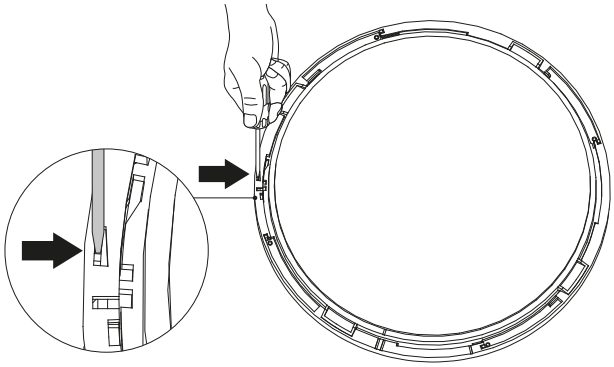

5

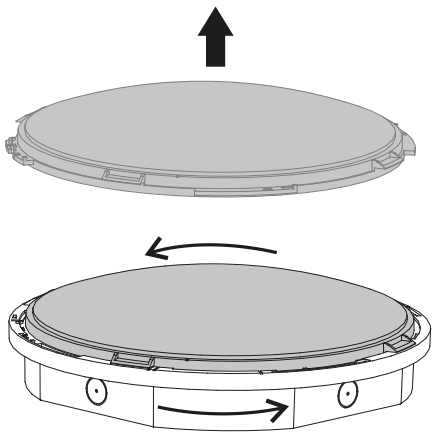

6

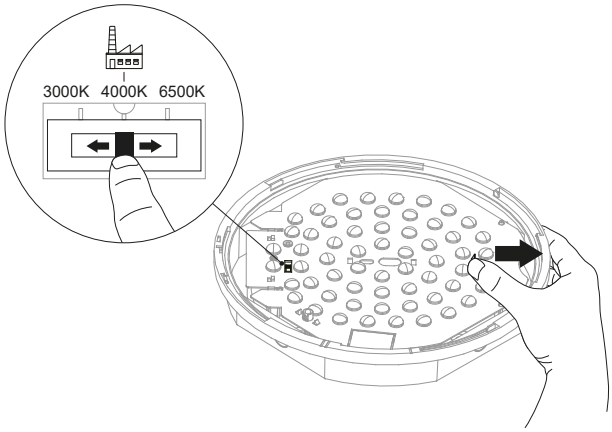

5yr

Warranty | Garantie | Garanzia | Záruka | Εγγύηση | Garantia | Garantía | Garanti | Takuu | الضمان

INDIGO:RUE DE LA LÉGENDE 32G, 4141 SPRIMONT, BELGIUM
NOBILE:VIALE ALEXANDRE GUSTAVE EIFFEL, 100, COMMERCITY ISOLA P21-24, 00148 ROMA, ITALIA
COLLINGWOOD:NN6 0BT, UK

V2

MIX Packaging | Supporting responsible forestry FSC® C123383

CADDY

INOVARA GROUP

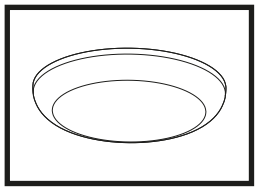

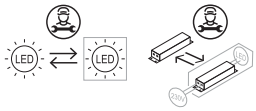

IP65 | IK10 | CE | UKCA | 3000K 4000K 6500K | 9W 12W 16W

220-240V 50/60Hz | INRUSH 15A/0.25ms | A↑G C

7

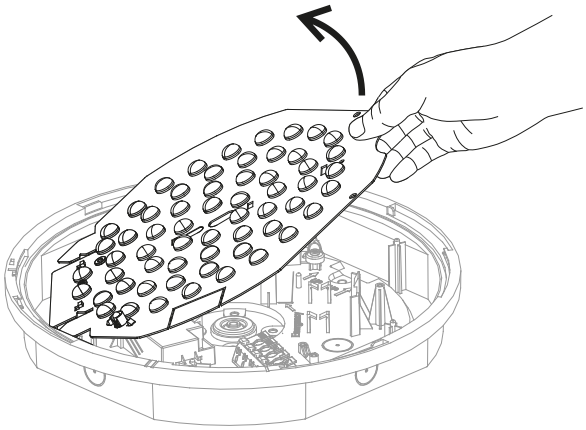

8

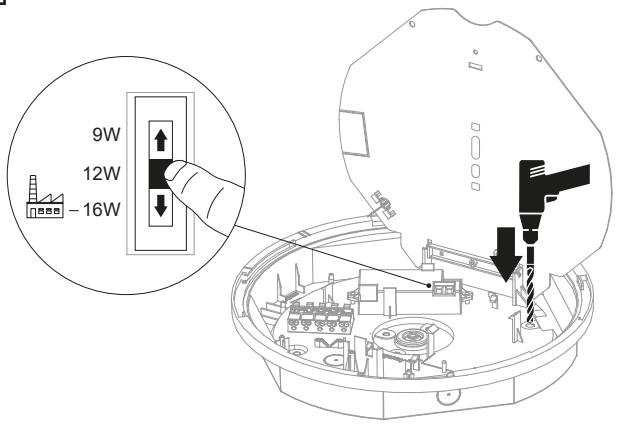

9

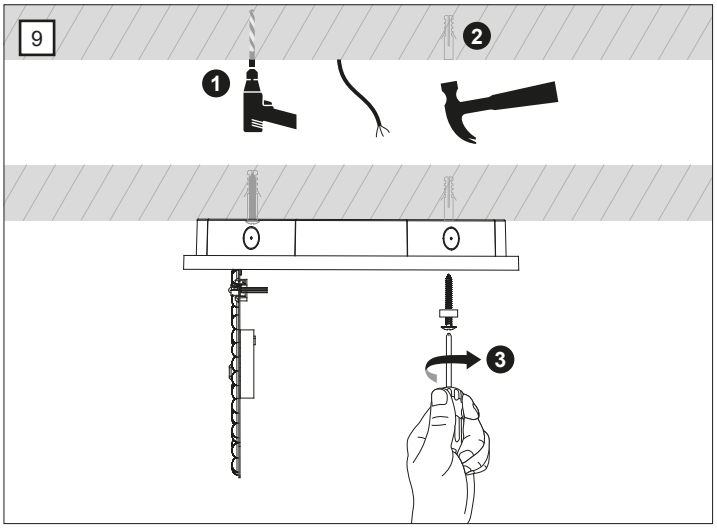

10

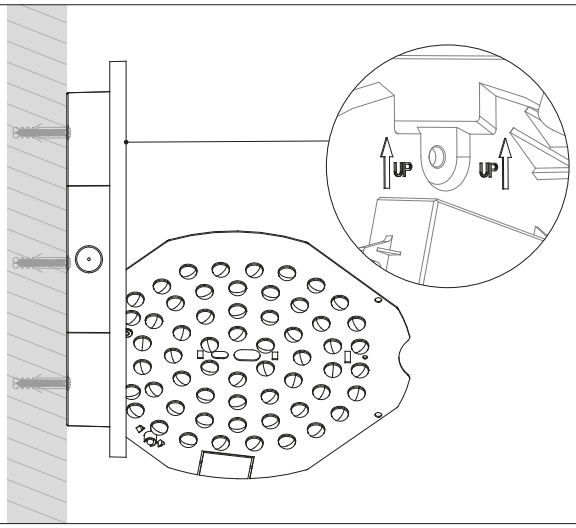

11

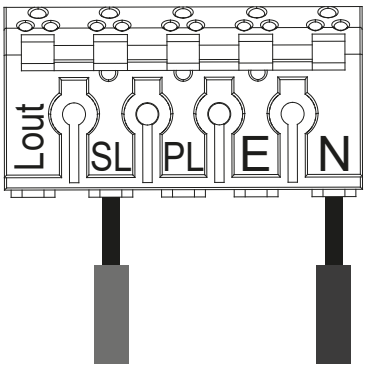

12

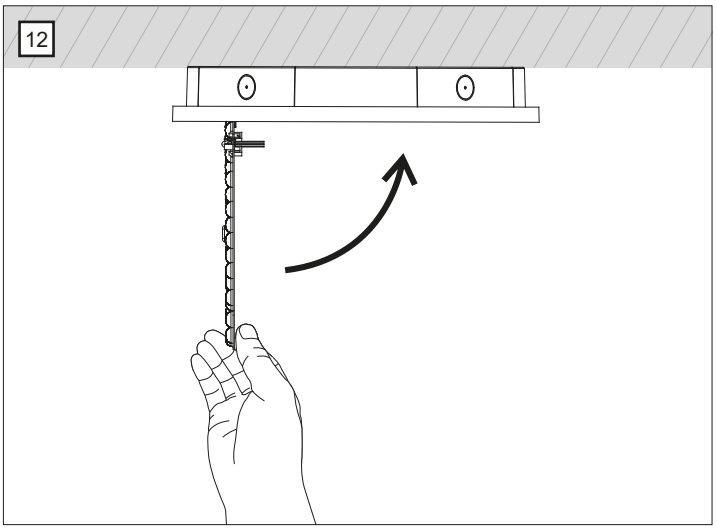

5yr

Warranty | Garantie | Garanzia | Záruka | Εγγύηση | Garantia | Garantía | Garanti | Takuu | الضمان

INDIGO:RUE DE LA LÉGENDE 32G, 4141 SPRIMONT, BELGIUM
NOBILE:VIALE ALEXANDRE GUSTAVE EIFFEL, 100, COMMERCITY ISOLA P21-24, 00148 ROMA, ITALIA
COLLINGWOOD:NN6 0BT, UK

V2

MIX Packaging | Supporting responsible forestry FSC® C123383

CADDY

INOVARA GROUP

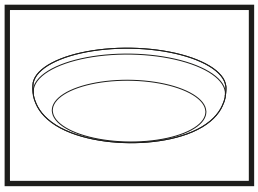

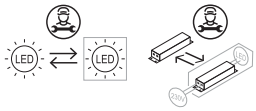

IP65 | IK10 | CE | UKCA | 3000K 4000K 6500K | 9W 12W 16W

220-240V 50/60Hz | INRUSH 15A/0.25ms | A↑G C

13

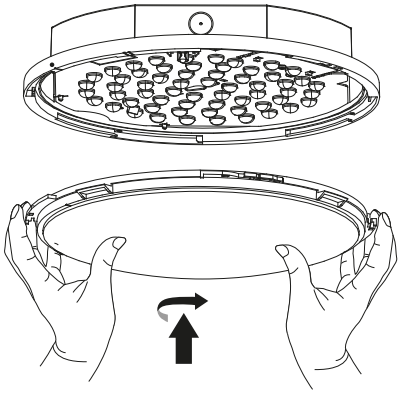

14

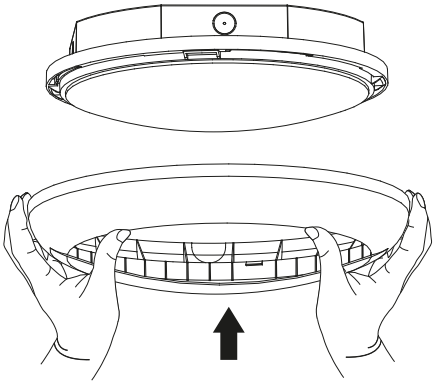

15

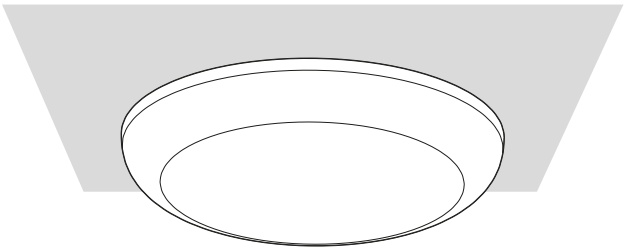

16

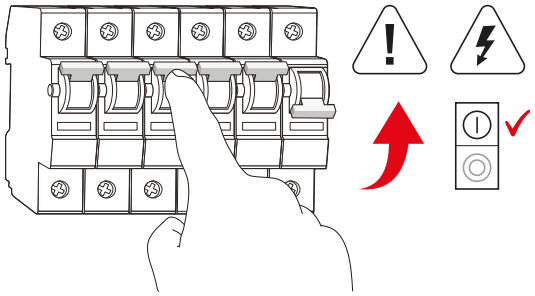

17

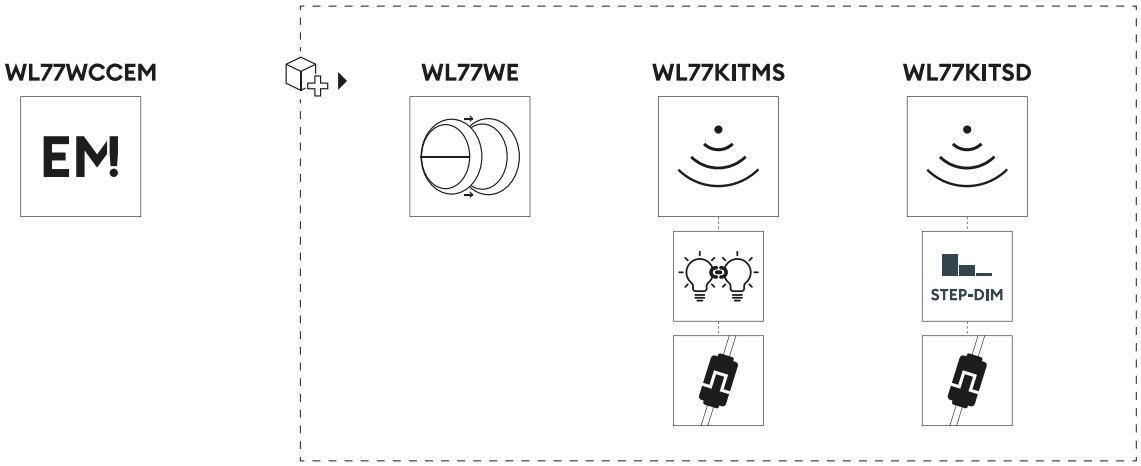

5yr

Warranty | Garantie | Garanzia | Záruka | Εγγύηση | Garantia | Garantía | Garanti | Takuu | الضمان

INDIGO:RUE DE LA LÉGENDE 32G, 4141 SPRIMONT, BELGIUM
NOBILE:VIALE ALEXANDRE GUSTAVE EIFFEL, 100, COMMERCITY ISOLA P21-24, 00148 ROMA, ITALIA
COLLINGWOOD:NN6 0BT, UK

V2

MIX Packaging | Supporting responsible forestry FSC® C123383