NOBILE
Italia

SLIM - SM030S

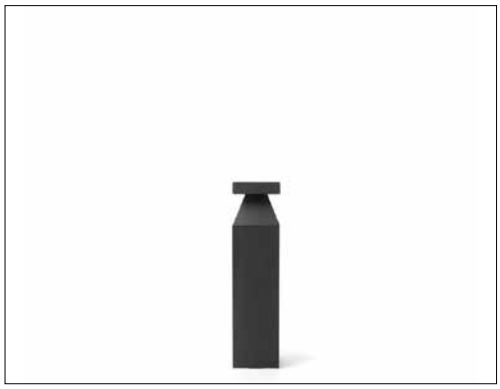

SQUARE BOLLARD

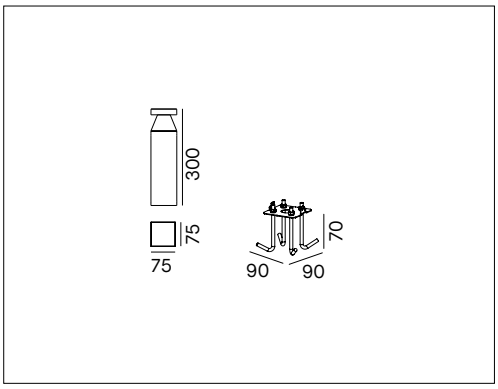

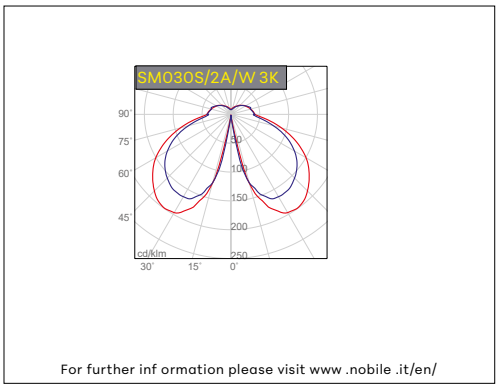

SPECIFICATION TEXT

TRIAC IP65 CE ERP COMPLIANCE

Square LED bollard for floor installation. Indirect light emission, 360°. Body in alluminium painted white (RAL9003), grey (RAL9006), anthracite (RAL7016) or dark brown. Diffuser in diffusing glass. Anchoring system for ground installation included. IK08. IP65. Height 300mm. Body 75x75mm. 220-240V - 50/60Hz power supply. TRIAC dimmable. Integrated colour temperature selector 2700K-3000K-4000K.

Mounting	Product type	**Bollard**			
	Installation type	**Floor, ground**			
Dimension	Body	**75x75mm**			
	Height	**300mm**			
Lamp	LED	**SAMSUNG**			
	System/W	**10.5W**			
	Luminous flux real		**2700K**	**3000K**	**4000K**
	(white colour)	**SM030S/2A/_**	1187lm	1245lm	1242lm
	Colour temperature CCT	**2700K - 3000K - 4000K**			
	Colour rendering index CRI	**>80**			
	LED Lifetime	**50.000 h L80B20 (Ta 25°)**			
	MacAdam	**3**			
Light	Light distribution	**Indirect 360°**			
Material	Body	**Die-cast aluminium**			
	Colour	**A= anthracite RAL7016 , G= grey RAL9006 , W= white RAL9003, BR= dark brown**			
	Diffuser	**Diffusing glass**			
	Anchoring system	**Stainless steel, included. COD. KIT/SM030**			
	Connector	**IP68 three pole connector, code: 5630, not included.**			
IK	IK	**08**			
Electrical	Operating voltage	**220-240V 50-60Hz power supply included**			
Warranty	Warranty	**5 years**			
Norms	Norm compliance	**EN60598-1, EN60598-2-1, EN62471, IEC/TR 62778, EN61000-3-3, EN61000-3-2, EN61547, EN55015**			

CODE CONFIGURATION

SM030S	**/**	**2A**	**/**	*****
				1
1	Colour	**A**= anthracite; **G**= grey; **W**= white; **BR**= dark brown		

Accessories upon request to be ordered separately

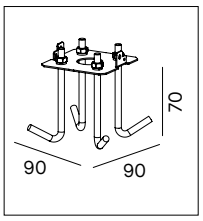

KIT/SM030
Anchoring system for inground installation included.

5630
IP68 three pole connector (not included)

Nobile Italia S.p.A.
Viale Alexandre Gustave Eiffel, 100 Commercity Isola P.21-24 - 00148 Roma, Italia - Tel. +39 06 65002524 - info@nobile.it
Export Sales Department: Via Lavoratori Autobianchi, 1 20832 Desio (MB), Italia - Tel. +39 0362 1790030 - export.dpt@nobile.it